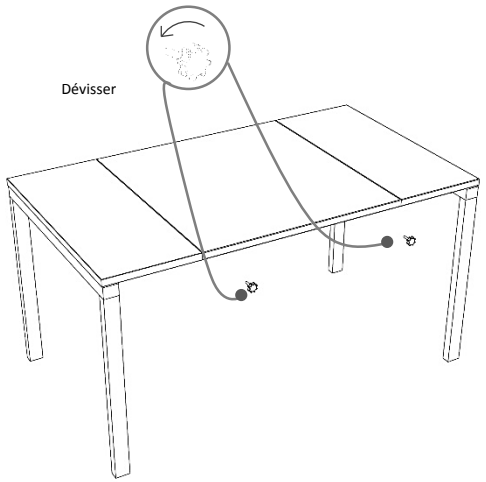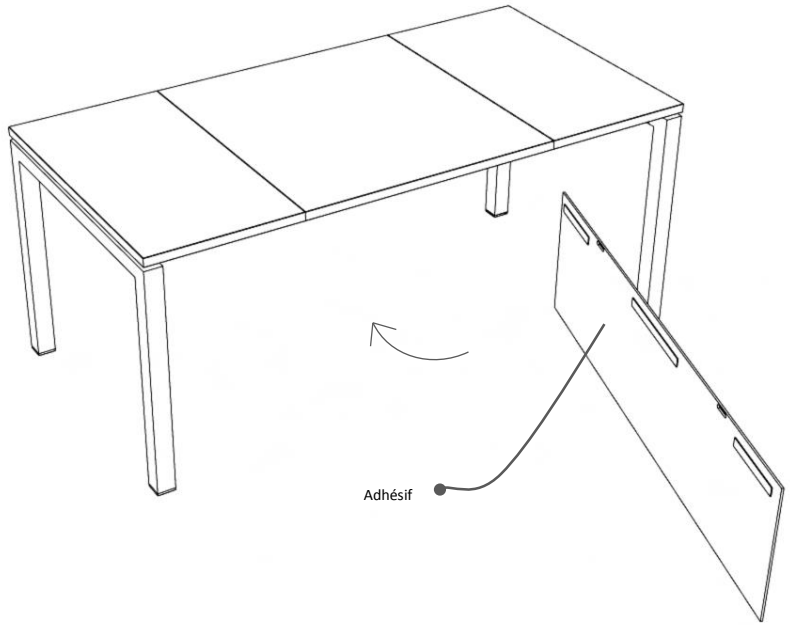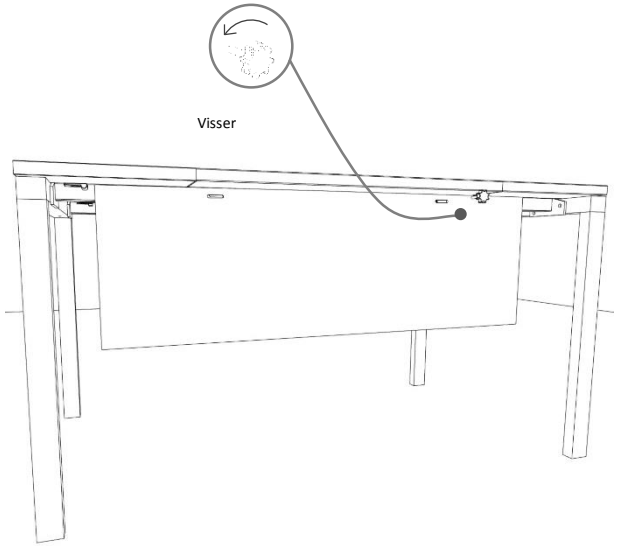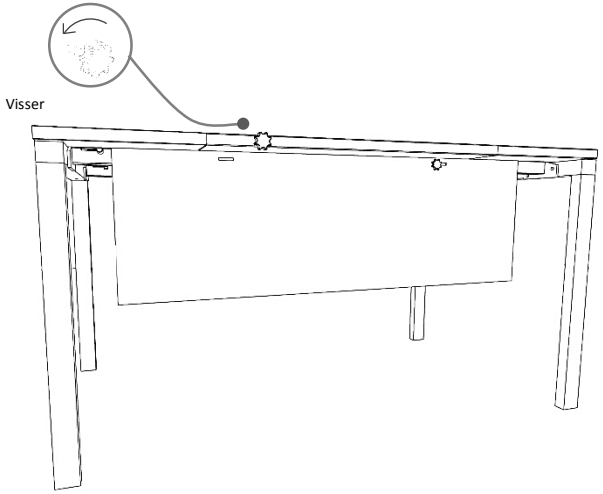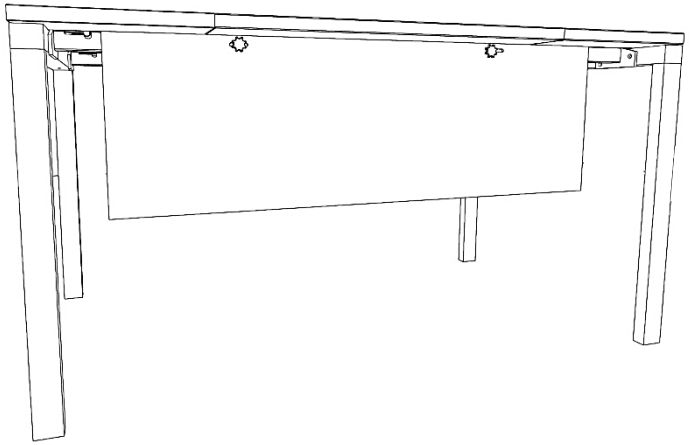easyDesk® by PAPERFLOW