ENERGIZER EN92

AAA

General Information

Classification:	Alkaline
Chemical System:	Zinc-Manganese Dioxide (Zn/MnO_2) No added mercury or cadmium
Designation:	ANSI-24A, IEC-LR03
Nominal Voltage:	1.5 volts
Operating Temp:	-18°C to 55°C (0°F to 130°F)
Typical Weight:	11.5 grams
Typical Volume:	3.8 cubic centimeters
Shelf Life:	10 years at 21°C
Terminal:	Flat Contact

Industry Standard Dimensions

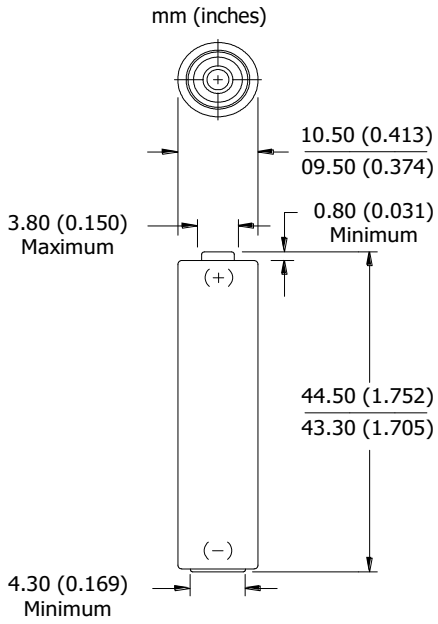

Milliamp-Hours Capacity

Continuous discharge to 0.8 volts at 21°C

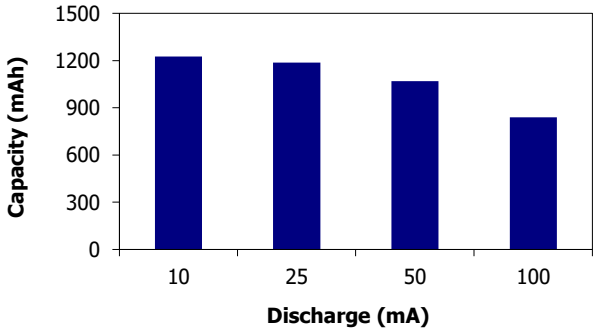

Industry Standard Tests (21°C)

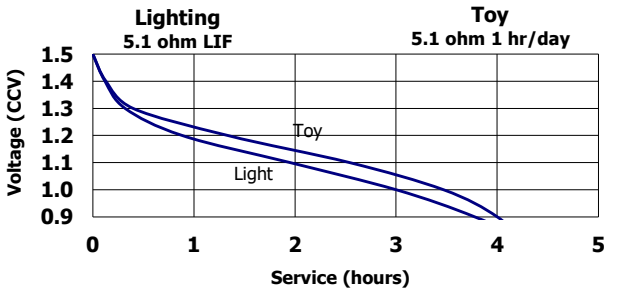

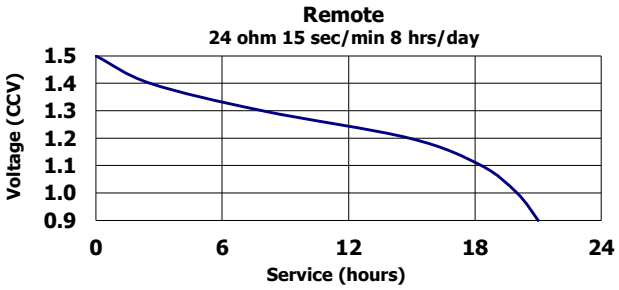

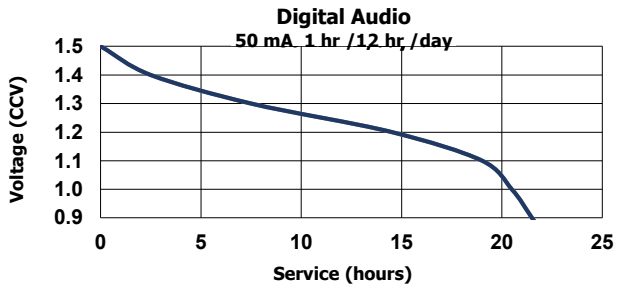

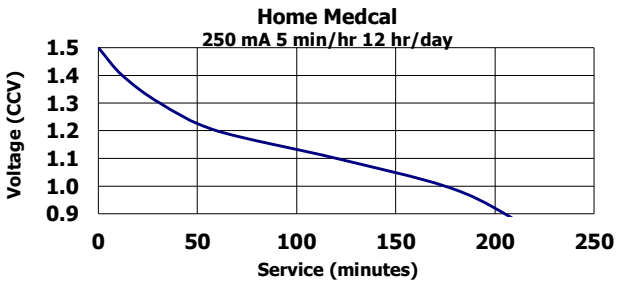

Important Notice

This data sheet contains typical information specific to products manufactured at the time of its publication.

Contents herein do not constitute a warranty and are for reference only.