easyOffice®
by PAPERFLOW

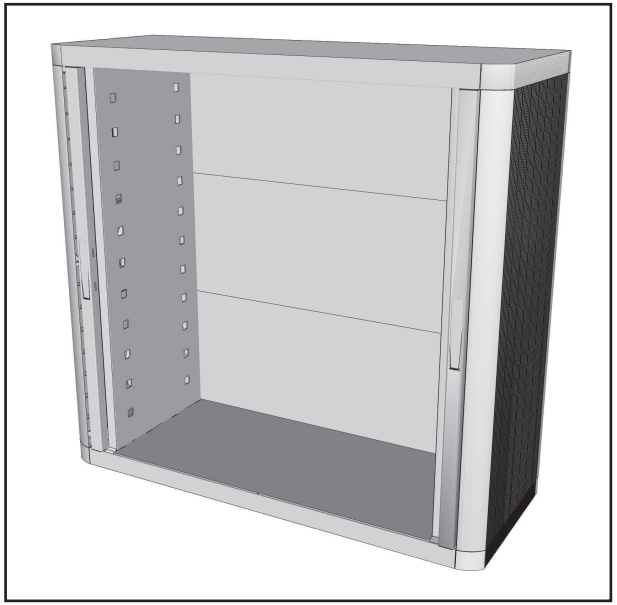

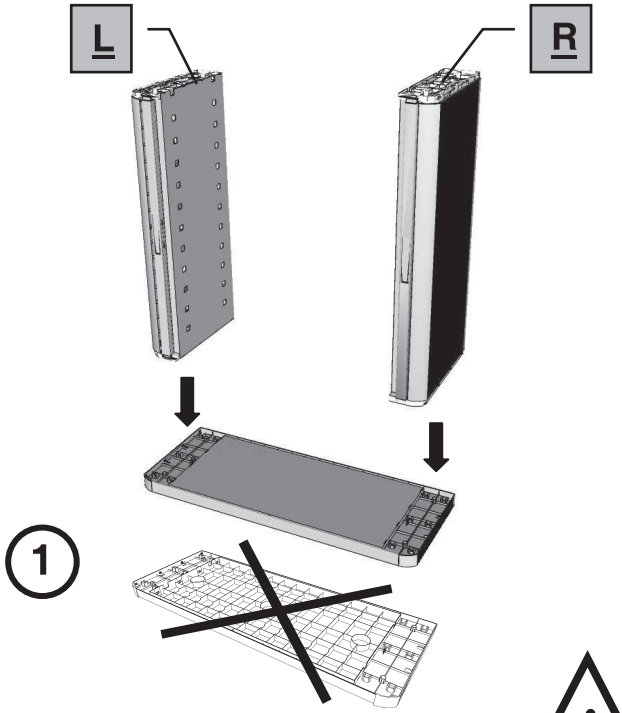

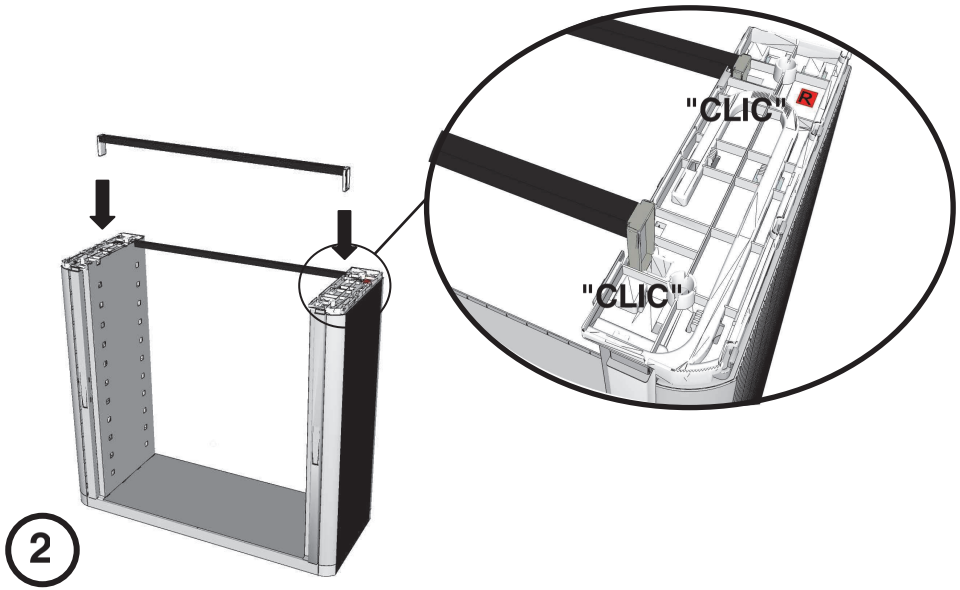

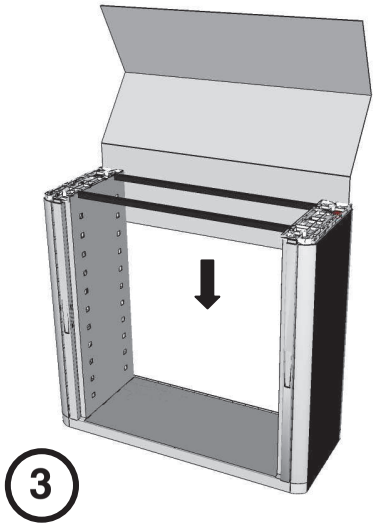

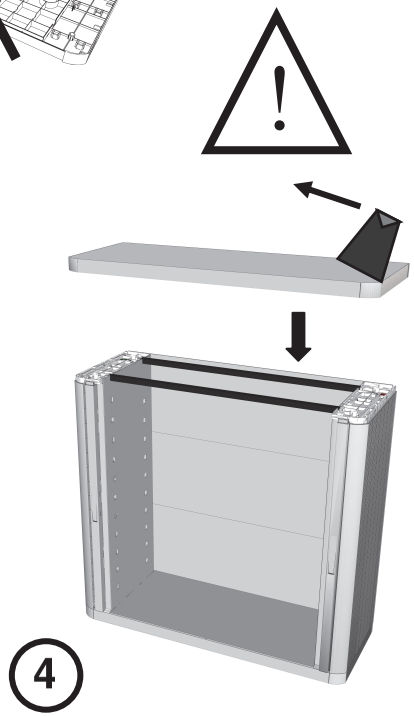

easyOffice® by PAPERFLOW

easyOffice tablette-20110105